BODY, GRAB BAR, PASSENGER - Z26S4D92AN/AH/BN/BH (C750082)

2026 RZR - RZR PRO S4 ULTIMATE (R01) - Z26S4D92AN/AH/BN/BH

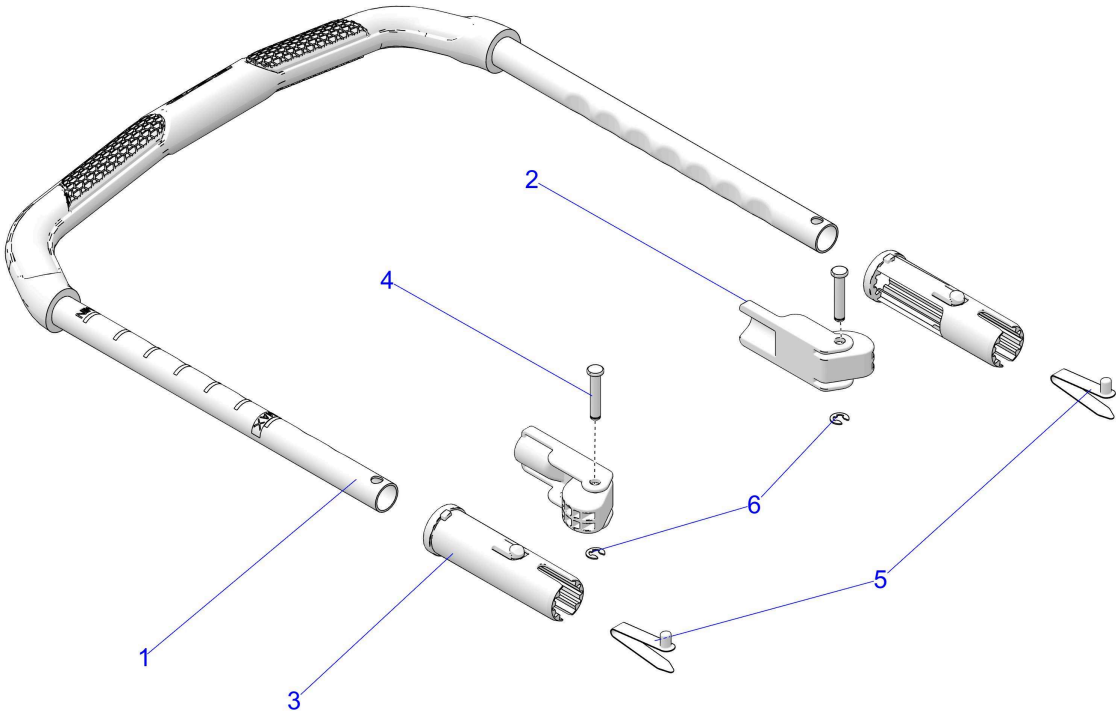

© 2024 Polaris Industries Inc.

C750082

Reference #	*Part#*	*Description*	*Quantity*
1	2639917	ASM-GRAB BAR,PASSENGER	1
2	5465237	CAM-GRAB BAR	2
3	5456486	BUSHING-GRAB BAR	2
4	7662365	PIN-GRAB BAR	2
5	7662425	PIN-LOCK,GRAB BAR	2
6	7710568	E-CLIP-M5,SS,0600101	2

Copyright 1996-2026 Polaris Industries U.S.A All rights reserved.